# Halsey Taylor Owners Manual

## Replacement Kit P/N 92776C

**ITEMIZED PARTS LIST**

| ITEM NO. | PART NO. | DESCRIPTION |
|---|---|---|
| 1 | 40116C | Nut - Cover |
| 2 | 40060C | Button |
| 3 | 15005C | Nut-Retaining |
| 4 | 61314C | Regulator |
| 5 | 40045C | Nut - Hex |
| 6 | 51576C | Bracket - Valve and Push Bar |
| 7 | 401475143730 | Clip - Speed Strip |
| 8 | 70817C | Elbow - 1/4" to 1/4" |
| 9 | 70745C | Union - 3/8" to 1/4" |
| 10 | 55996C | Strainer |
| 11 | 50986C | Holder - Regulator |
| 12 | 70002C | Screw - #10 x .50 HHSM |
| 13 | 23004C | Bracket - Regulator Mtg. |
| NS | 51544C | Bubbler |
| NS | 100322740560 | Gasket - Black |
| NS | 111516043890 | Pin - Cotter 1/8" x 3" |

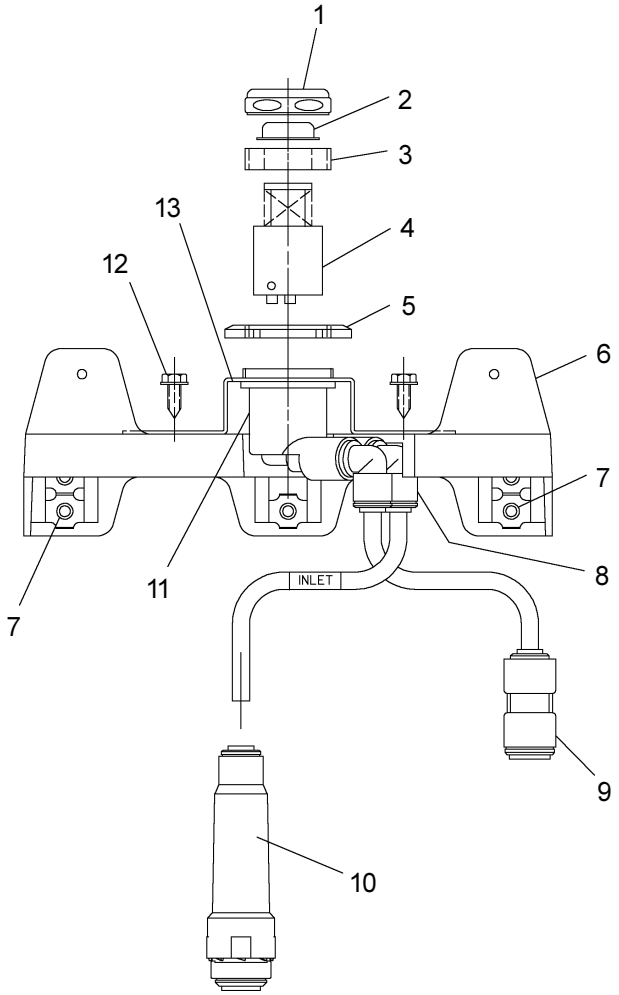

## Removal of Existing Valve

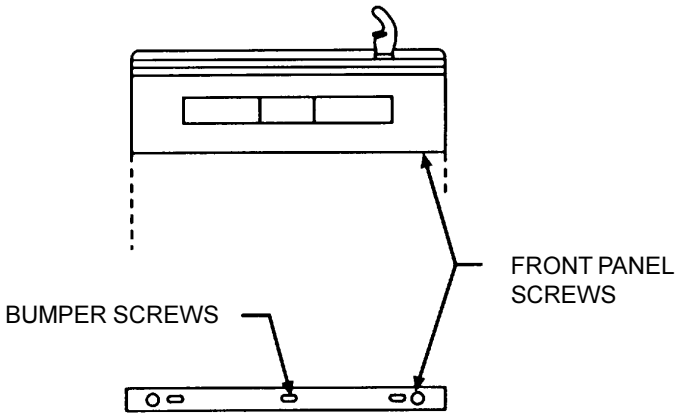


Remove two (2) bumper screws and two (2) screws mounting front panel at bottom using a 5/16" and 1/4" socket or nut driver or a regular slotted screwdriver. Loosen the (2) screws holding the front panel at the top. Remove the front panel and set aside

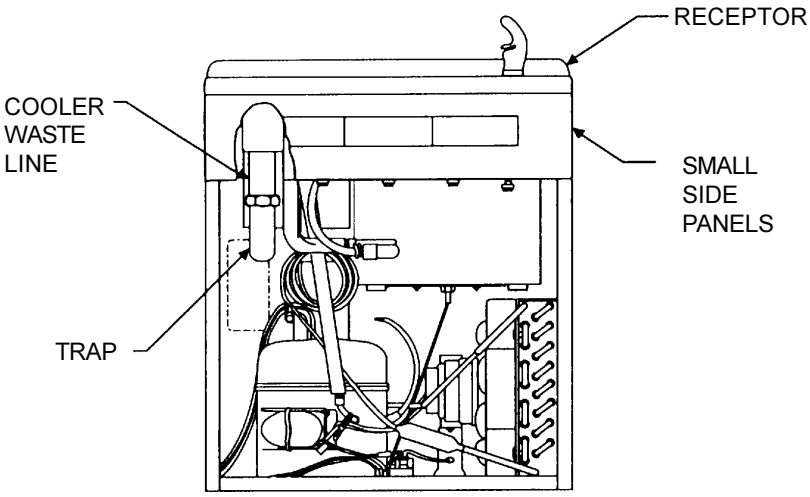


Loosen (2) screws on upper front panel using a 5/16" socket or nut driver. Remove upper front panel. Unplug the water cooler from electrical outlet. Shut off water supply.

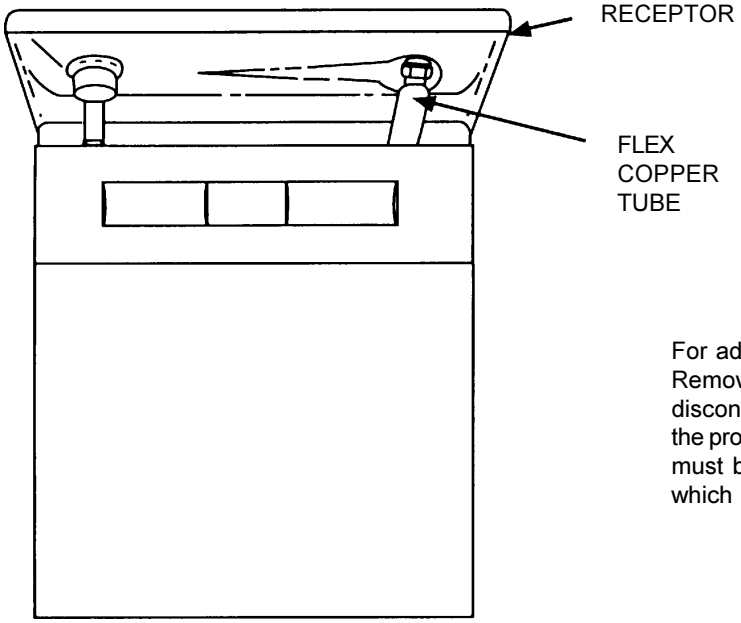


For additional access to water valve connections. Remove the eight (8) receptor mounting screws, disconnect the waste line from P-trap and unscrew the projector. Lift the receptor. **NOTE:** Extreme care must be taken not to kink the flexible copper line which supplies the projector.

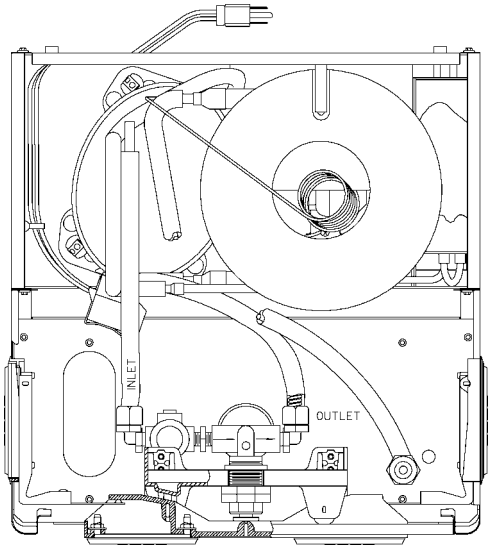


Top view of cooler
w/basin removed

Remove (5) screws holding the black plastic regulator bracket using a 5/16" socket or nut driver.

Disconnect water inlet and outlet lines from existing water valve.

Remove regulator with bracket from the water cooler. Remove cotter pins from bracket and remove front push bar.

If the water lines on the unit were connected to the valve with black compression fittings:

-Remove and discard the "o"-ring and black plastic spacer

-**DO NOT ATTEMPT** to remove the grab ring and connection nut. Attempting to remove the grab ring can damage, nick or scratch, the sealing area on the tube end.

If the water lines on the unit were connected to the valve with brass flare fittings:

-Cut the tubing as close to the flare as possible with a tube cutter. **NOTE:** Only use a tube cutter to cut the tubing so the end is square. Other tools, for example a hacksaw, could leave an excessive burr.

-Discard the cutoff end and flare nut.

-De-burr the tube ends before assembling to the new valve assembly.

## Installation Of New Valve Assembly

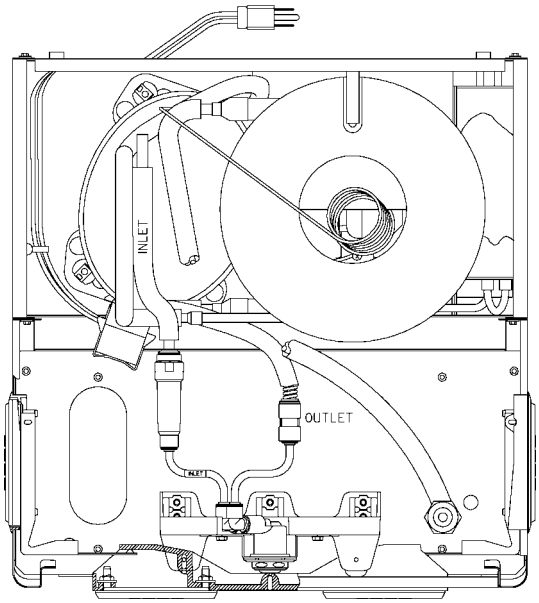


Top view of cooler
w/basin removed

Connect water inlet line, from building supply to strainer on replacement valve assembly.

Connect chiller line to super speed fitting.

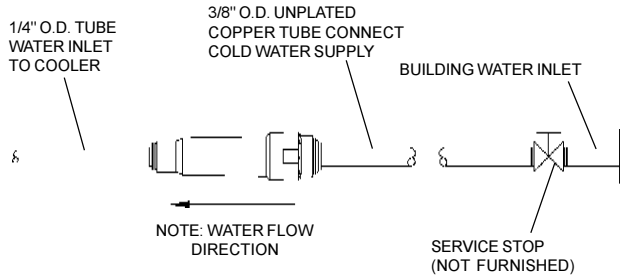


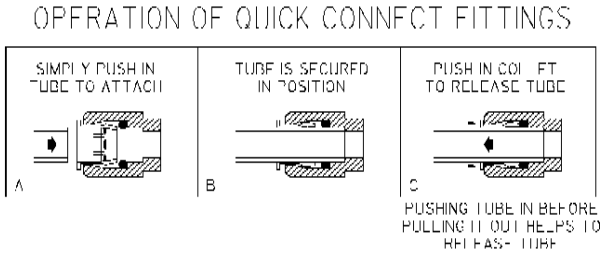


1. Push tubing into fitting until it reaches positive stop (approximately 3/4 inches). **DO NOT SOLDER TUBES INSERTED INTO THE STRAINER AS DAMAGE TO THE O-RINGS MAY RESULT.**

2. To remove tubing from fitting, relieve water pressure, push in on gray collar while pulling out on tubing.

Turn on water supply and check for leaks. Install new projector and reposition receptor and drain tube to "P"-trap. Adjust water flow. Flow is adjusted by removing cover and button on valve bracket, a clockwise adjustment to screwdriver slot increases the stream height. Reassemble cover and button. **NOTE:** Flow must be adjusted before push bar is installed. Install push bar on to new valve bracket. Add speed clip strip to valve bracket assembly, (row of 4 - (1) each side). Install valve bracket into unit. Reattach receptor and reconnect wate tube to "P"-trap. Connect power cord to electrical outlet. Reassemble panels and kickplate to unit.

Halsey Taylor®
2222 CAMDEN COURT
OAK BROOK, IL 60523
630.574.3500

PRINTED IN U.S.A.

FOR PARTS, CONTACT YOUR LOCAL DISTRIBUTOR OR CALL 1.800.323.0620